The RX 10 is a communication receiver for the Amateur Radio bands of 80-40-20-15 meters. The synchrodyne circuit employing direct conversion assures freedom from images and "birdies". Sensitivity is high and frequency drift is negligible. A built-in oscillator can be used for code practice or for a CW monitor when used with a suitable transmitter.

SPECIFICATIONS

General

Frequency Range:	80	3.5- 4.0 MHz
	40	7.0- 7.3 MHz
	20	14.0-14.6 MHz
	15	21.0-21.9 MHz

Modes of operation: USB, LSB, CW, AM
Power: 117 V.A.C. 50-60 Hz 1/8 A. or 12 V.D.C. 35 ma.
Size: 10-3/8" W. x 4-1/2" H x 6-5/8" D.
Shipping Weight: Approximately 2-1/4 pounds.
Finish: Baked enamel with molded end panels and wood grain inserts.

Performance

Sensitivity: Less than 1 uv provides readable signal.
Stability: Less than 100 Hz drift. No warm-up.
Audio Output: 3 Volts across 1000 ohm load
Antenna Impedance: 50-75 ohms - - unbalanced
Circuit: Direct conversion. Synchrodyne.
Selectivity: 2 KHz @ 6 dB down points.
Controls: Band Selector (Push-button)
Audio gain
Antenna tune
Power ON-OFF
Main tune

Rear Panel Connectors:	Antenna	-	Phono socket
	Key	-	Phono socket
	12 V.D.C.	-	Phono socket

INSTALLATION

Power Connections

When shipped, the power source is connected for 110 V.A.C. 50-60 Hz operation. If 12 V.D.C. operation is desired, change the switch on the back panel from 110 V.A.C. to 12 V.D.C. A 12 volt source can then be connected through the phono socket marked 12 V.D.C. The negative should be connected to the ground and positive to the pin of the phono jack.

Antenna Connections

Satisfactory reception will be attained with any antenna of reasonable length. For best operation the antenna should be tuned or matched at the frequency of reception. This can be accomplished quite easily with a random length antenna and a tuner, such as the TEN-TEC Model AC5. A single wire antenna is connected to the pin of a phono jack for insertion into the connector marked "antenna". The shield of a coax feed line is connected to the ground on the phono jack and the inner conductor is connected to the pin.

Headphones

The receiver output is designed to match headphones with an impedance greater than 1000 ohms. The headphones plug into a phone jack located on the front panel.

Key

The RX10 contains a built-in audio oscillator to assist in learning the code. A key may be connected through the phono socket on the rear panel. One of the key leads is connected to the ground or shield of the phono jack and the other is connected to the phono jack pin. It also can be used as a CW monitor with a suitable transmitter.

OPERATION

Operating Controls

Front Panel:

On-Off: Controls application of power to the receiver.

The pilot light operates only when the receiver is connected to the 110 V.A.C. power source. When operating on battery power, it is disconnected to reduce current drain.

Volume: Controls receiver audio level.
Bandswitch: Push-button selects the desired band.
AntennaTune: Resonates the input coil to the band selected.
Main Tuning: Selects the received frequency.

Rear Panel:

Power Source: Selects either 110 V.A.C. or 12 V.D.C. power source.

Internal Control:

Volume (Code Oscillator): Located on the rear of the circuit board.

Operating Procedure

Turn the receiver on, select the desired band with the push-button switch, and turn the Antenna Tune to the same indication. Advance the volume control to a comfortable level and tune in a station with the main tuning knob. It may be necessary to re-tune the Antenna Tune control slightly for maximum received signal strength. To change bands, simply select the desired frequency with the push-button and re-peak the Antenna Tune for maximum signal strength.

Radio waves are affected by the time of day, time of year, proximity to the transmitting station, local weather (static) and the overall propagation conditions. Accordingly, reception will vary from day to day or even hour to hour.

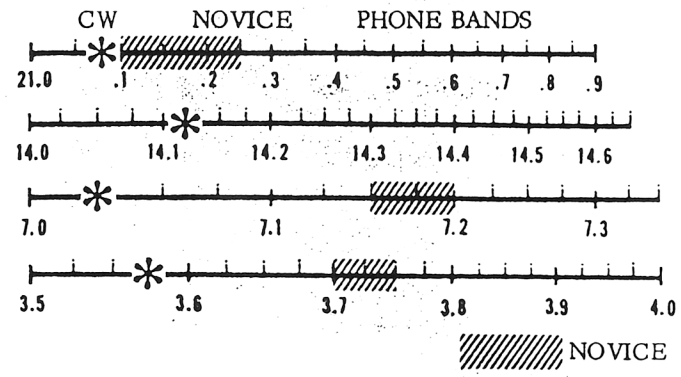

80 Meters (3.5-4 MHz). A band for semi-local communication. The day time range is usually within a several hundred mile range. Night time extends it, often across the USA. In the more remote areas there are times when no signals are audible especially in daylight. Static is often bothersome especially in summer nights.

40 Meters (7.0-7.3 MHz). The medium range band. Reliable frequency for communications from 500-2000 miles at night and 100-500 miles in daylight.

20 Meters (14.0-14.35). Excellent band for moderate to long distance communication. Primarily a daytime band, it is frequently "open" until long after sundown. During periods of high sunspot activity it is frequently active 24 hours a day. It is rarely useful for distances less than several hundred miles.

15 Meters (21-21.450). The DX band. Usually open only in the daylight hours. Often no signals can be heard due to propagation conditions.

* W1AW, an amateur station operated by the American Radio Relay League transmits code practice on approximately this frequency on a regular schedule. For exact schedule and frequency, please see QST magazine.

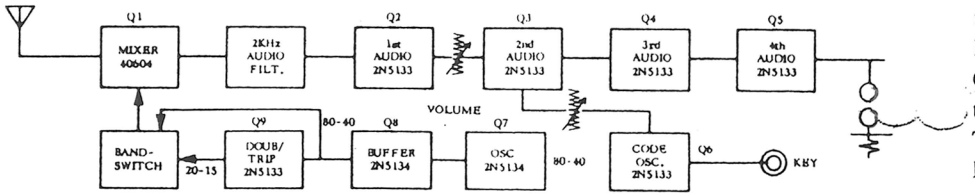

FIG. 1

PRINCIPLES OF OPERATION

The RX10 is a direct conversion four band receiver complete with power supply and code practice oscillator. It contains eight silicon transistors, one field effect transistor and six silicon diodes.

Figure 1 is a block diagram of the receiver. The antenna is connected to the receiver through a phono socket. The signal is applied to the mixer, Q1. The mixer converts the signal directly to audio where it is passed through a 2KHz audio filter for selectivity. It is then passed through four amplifier stages comprised of Q2, Q3, Q4, and Q5.

The code oscillator, Q6, is passed through its volume control to the amplifier at Q3. The main volume control does not affect the level of the code practice oscillator. The code practice oscillator level can be set with the miniature printed circuit potentiometer located at the rear of the circuit board.

The correct injection frequency is selected by the push-button band switch. The main oscillator, Q7, operates either on 80 or 40 meters. Its output is buffered in Q8 and fed to the doubler/tripler Q9. The band switch then selects the proper frequency from the output of Q8 or from the doubler/tripler output, Q9.

Alignment

In order to follow the alignment procedure it is necessary to remove the top cover.

Tune an accurately calibrated receiver to 7 MHz. Set the RX10 dial to 7.0 MHz and the band switch to 40. The main oscillator coil is located at the front left side of the circuit board. Insert the alignment tool provided through the top slug and into the bottom slug nearest the board. Tune the oscillator for zero beat in the auxillary receiver. Change the auxillary receiver to 3.5 MHz, the band switch to 80 and tune the top slug for zero beat. This completes the dial calibration. The 20 and 15 meter calibration is derived from the 40 meter oscillator by a doubler-tripler.

Doubler/Tripler Alignment:

Set the band switch to 15 meters, peak the antenna tune control and tune in a signal. Adjust the slug in the center shield can for maximum received signal. Switch the receiver to 20 meters, peak the antenna tune control, and tune the trimmer capacitor next to the shield can for maximum received signal.

Mixer Bias Control:

The mixer bias is controlled by a miniature potentiometer located behind the antenna tune control. Set the RX10 for 20 meter reception. Connect an RF generator to the receiver antenna connector. Set the generator to 10 MHz, apply a 10,000 uv A.M. modulated signal to the RX10. Adjust the bias potentiometer for a null in the detected audio.

The RX10 has built-in diode protection for large RF signals or induced voltage from an electrical storm. During an electrical storm it is good practice to disconnect all antennas and connect them to a suitable water pipe ground. If the RX10 is used with a high power transmitter, the antenna should be disconnected and/or shorted during transmissions.

Occasionally extremely strong signals, such as a local broadcast station or shortwave station will cause interference. This is due to peak detection in the mixer and is not affected by the main tuning. In the case of shortwave stations, the antenna tune control will affect the overload. This control should be carefully tuned to the frequency in use. Additional selectivity, such as an antenna tuner, usually removes the interfering signal.

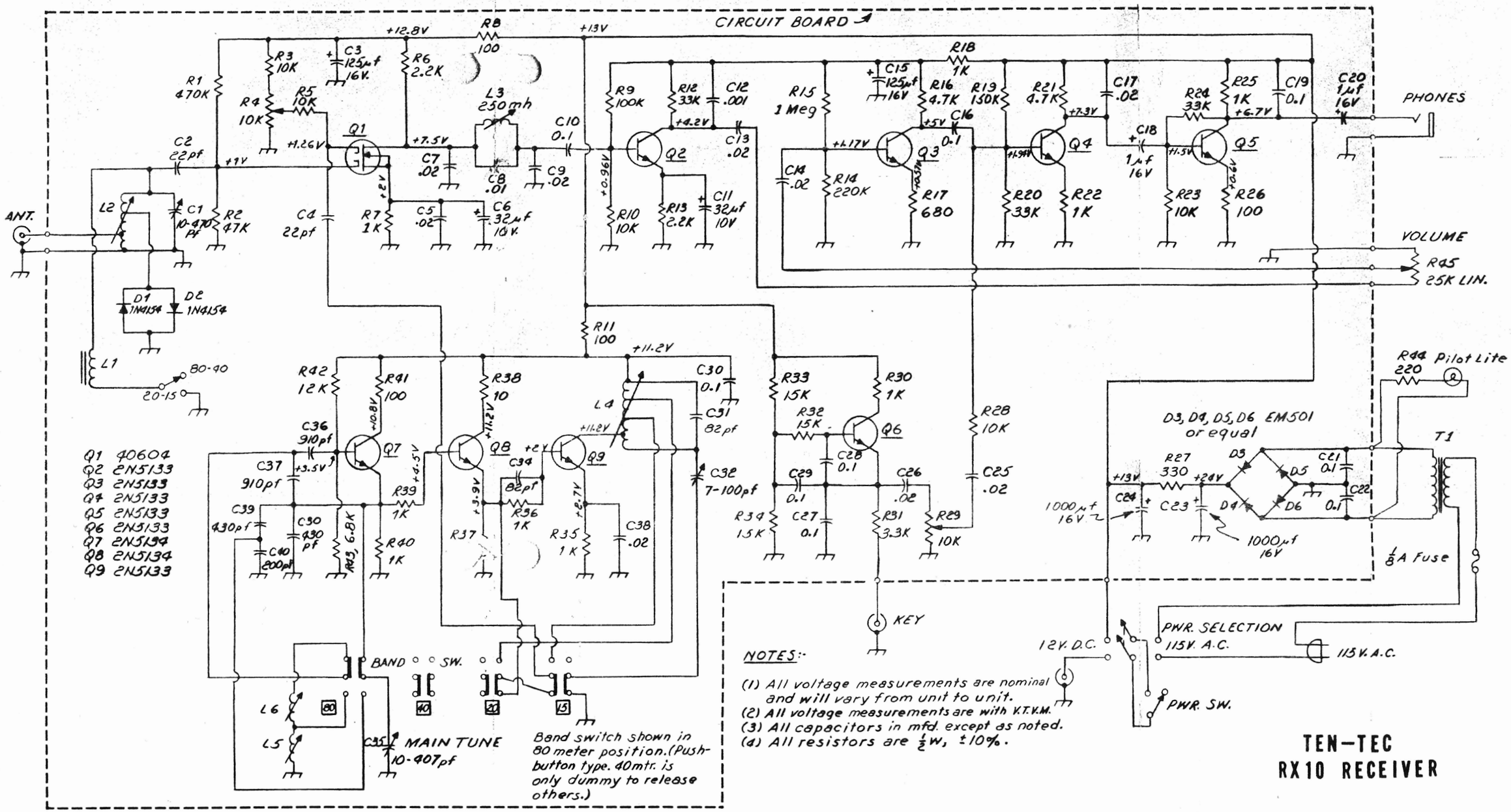

TEN-TEC
RX10 RECEIVER